INSTRUCTION SHEET

CYLINDER FOR HYDRAULIC DEFLECTOR OR ROTATION

APPLICATION

For SBG1084 and SBG1094 snowblowers.

INSTALLATION

1. **Figure 1:** Remove a circlip (items 1-4) from each cylinder pin (items 2-3) and remove the pins. Placing the hydraulic ports in the position shown on figure 12, attach the fixed end of the cylinder (item 6) to the chute base (item 5) and the rod end to the upper chute bracket with the pins and circlips (items 1-2-3-4).
2. **Figure 2:** Attach the hose support (item 9) to the upper plate of the three point hitch with two 3/8"NC x 1 1/4"lg serrated flange bolts (item 10) and two 3/8"NC serrated flange nuts (item 11).

   NOTE: The hose support is not compatible with the hydraulic rotation.
3. **Figure 2:** Connect the 3/8" ends of both hoses (item 2) to the cylinder (item 1) and install a quick coupler with rubber dust cap (items 6-7) at the end of each hose.
4. **Figure 2:** Secure the hoses to the hose support with the hose clamp, the 3/8"NC x 1 1/2" lg bolt and the 3/8"NC nylon insert nut.
5. **Figure 2:** Attach hoses together with nylon tie wraps (item 8) where needed. Make sure to leave enough play to the hoses to allow the complete rotation movements.

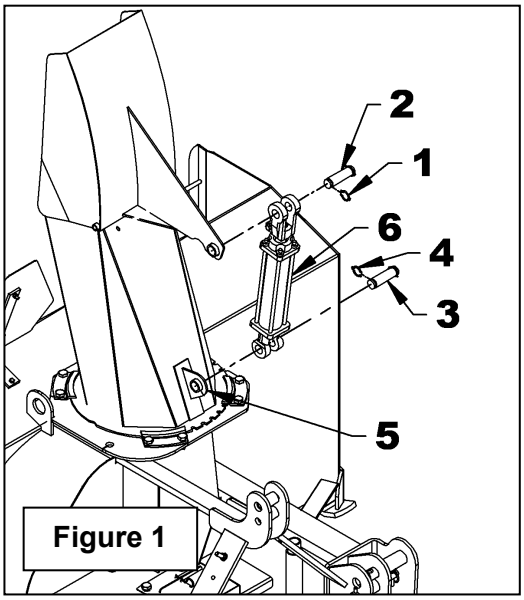

Figure 1

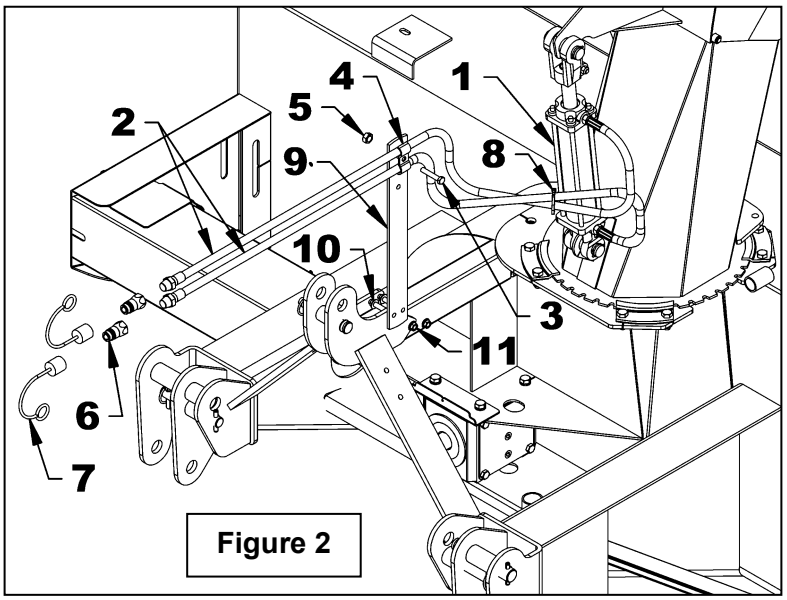

Figure 2

INSTRUCTION SHEET

CYLINDER FOR HYDRAULIC DEFLECTOR OR ROTATION
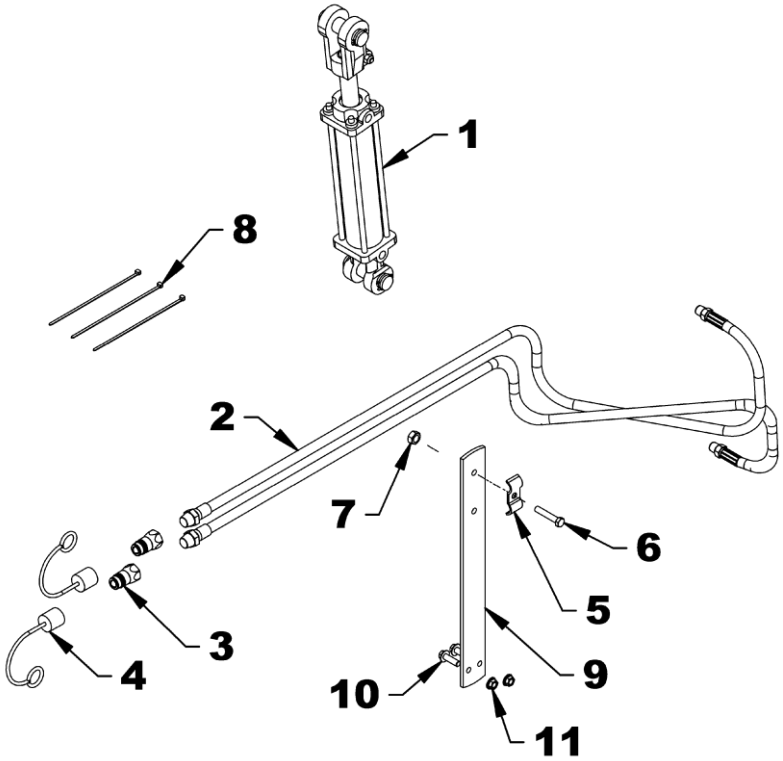
REF.	DESCRIPTION	QTY	PART #
1	Cylinder 2" X 8" inc. pins	1	3900022
	Seal kit	1	3900205
2	Hose 3/8" x 108" lg 3/8" NPT RM x 1/2" NPT RM	2	3700145
3	Female quick coupler 1/2" NPT male	2	656480
4	Dust cap	2	664898
5	Hose clamp	1	660440
6	Bolt 3/8" NC x 1 1/2" lg Plated	1	0100042
7	Nut nylon insert 3/8" NC Plated	1	1100006
8	Tie wraps 8" x 4.8 mm black	3	2100003
9	Hose support	1	669031
10	Serrated flange bolt 3/8"NC x 1 1/4"lg gr5 Plated	2	0900035
11	Serrated flange nut 3/8"NC Plated	2	0200079